REVISION				
REV.	ZONE	DESCRIPTION	DATE	DRAWNBY
A		INITIAL RELEASE	10/10/2025	A. AZAR

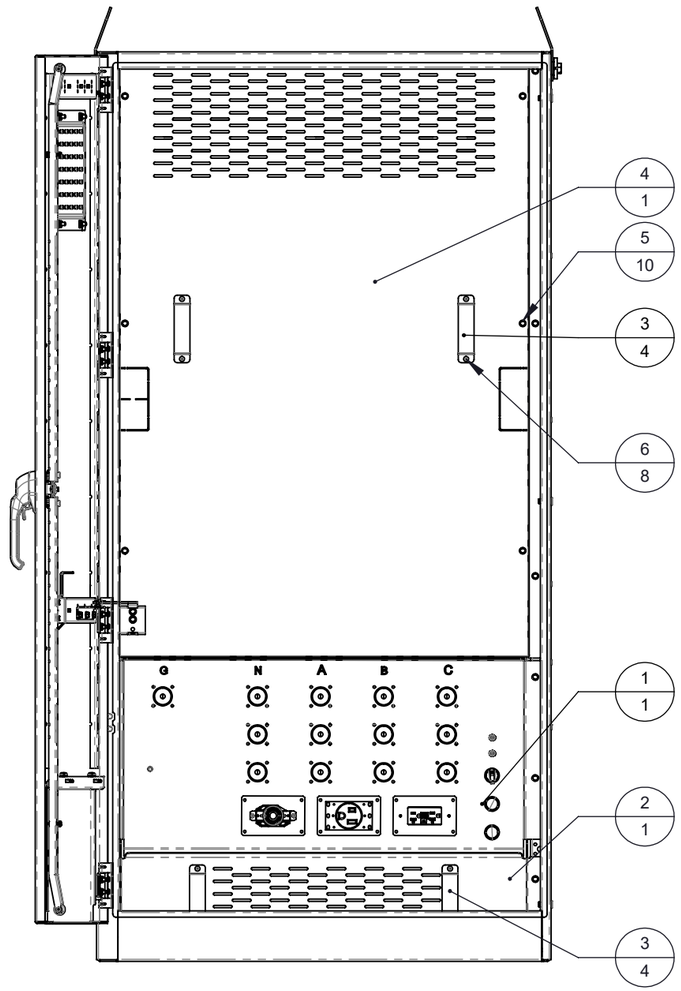

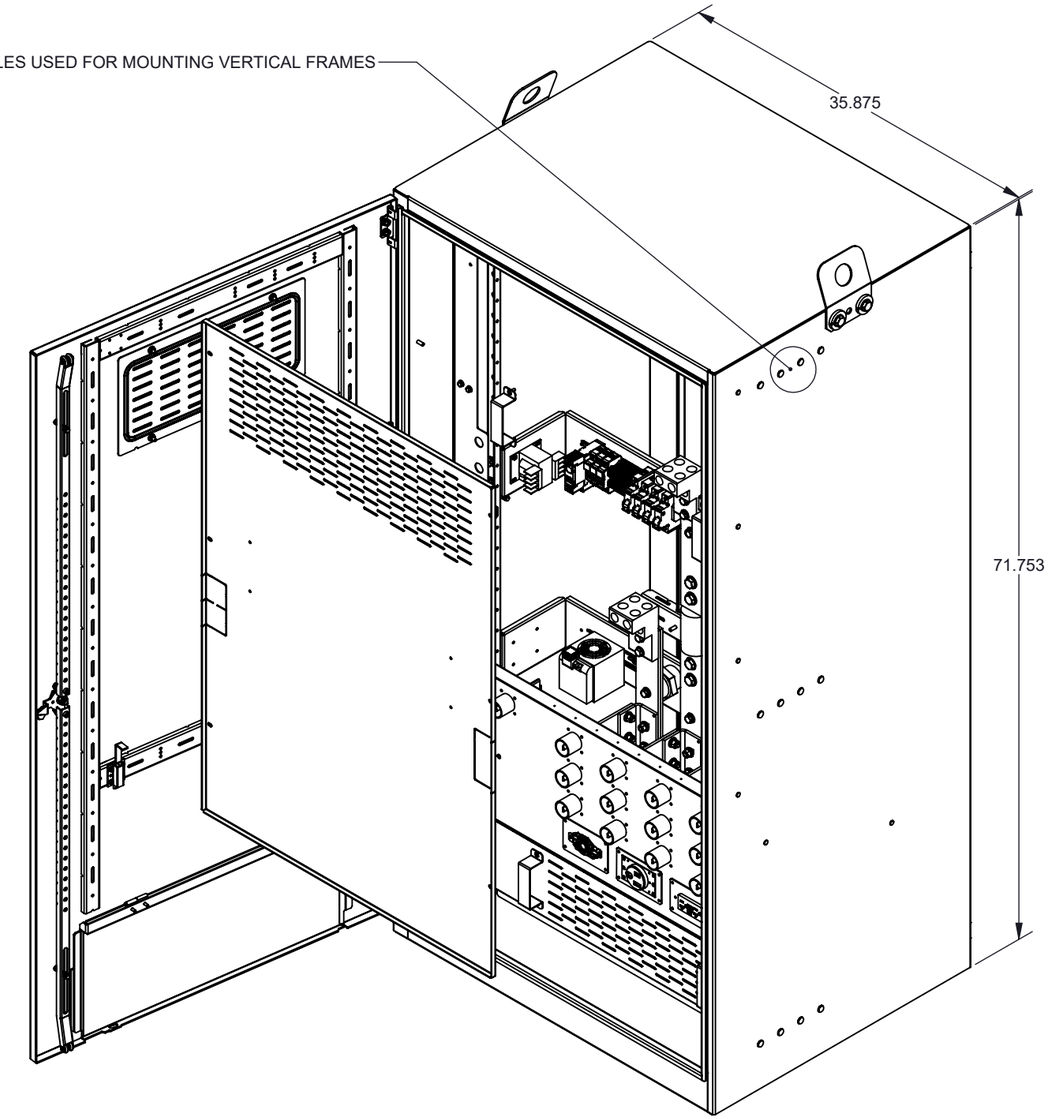

BILL OF MATERIAL

ITEM NO.	PART NUMBER	DESCRIPTION	QTY.
1	100-80610	ASSEMBLY, INTERNAL, FFCC-C1, 1200A, FRAME MOUNT, 4C 600MCM	1
2	250-70544	DEADFRONT, BOTTOM, 72X36X30	1
3	250-00024	HANDLE, DEADFRONT	4
4	250-80708	DEADFRONT, TOP, 72X36X30	1
5	STF-0420X0375-ZN	SCREW, THREAD FORMING - 1/4-20 UNC X 0.375 - 5 ZN	10
6	ROB-R632X0809-SS	RIVET, OPEN END BLIND - 3/16 X 0.251-0.375 GRIP RANGE - SS	8
7	890-0616F	ASSEM, 3/8-16 UNC ZN, NH, WP, WF	12

MATERIAL 361.91 lbs

FINISH
BARE

PROPRIETARY AND CONFIDENTIAL

THE INFORMATION CONTAINED IN THIS DRAWING IS THE SOLE PROPERTY OF FOXFAB POWER SOLUTIONS ANY REPRODUCTION IN PART OR AS A WHOLE WITHOUT THE WRITTEN PERMISSION OF FOXFAB POWER SOLUTIONS IS PROHIBITED.

DRAWN BY AA
SAVED ON 10/10/2025
BD -
TOP DIE -
BOTTOM DIE -

UNLESS OTHERWISE SPECIFIED:
DIMENSIONS ARE IN INCHES
TOLERANCES:
X ± .25
X.X ± .1
X.XX ± .05
X.XXX ± .025
ANGULAR ±1
INTERPRET DIM AND TOL. PER:
ASME Y14.5

Foxfab Power Solutions
2579-188 ST.
SURREY, BC V3Z 2A1
(604) 460 - 9310
WWW.FOXFAB.COM

TITLE:
FFCC-C1-1200-V4-ALU-LA-AC-AF-2WSDS-AD2-AD3-AD5-AG-FUS

THIRD ANGLE:
SIZE **B**
SCALE 1:24
REV A
ITEM NO.
DWG. NO. 003-80203
SHEET 1 OF 1

REVISION				
REV.	ZONE	DESCRIPTION	DATE	DRAWNBY
A		INITIAL RELEASE	10/10/2025	A. AZAR

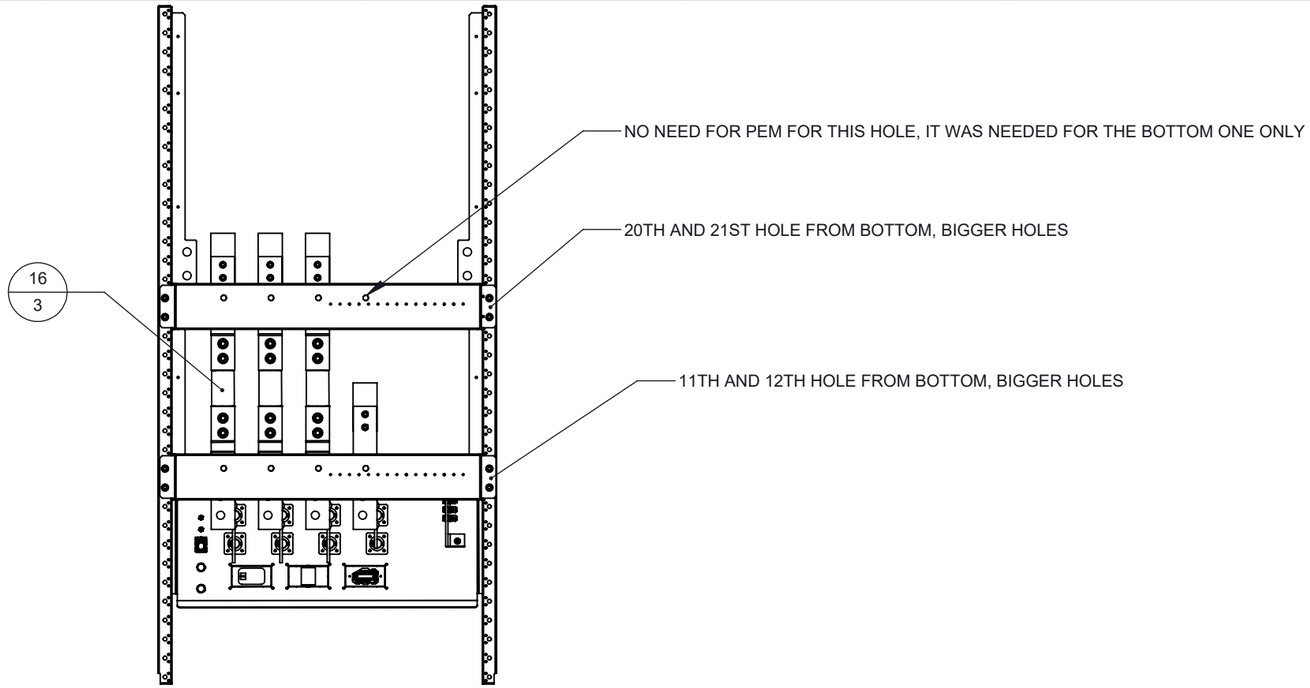

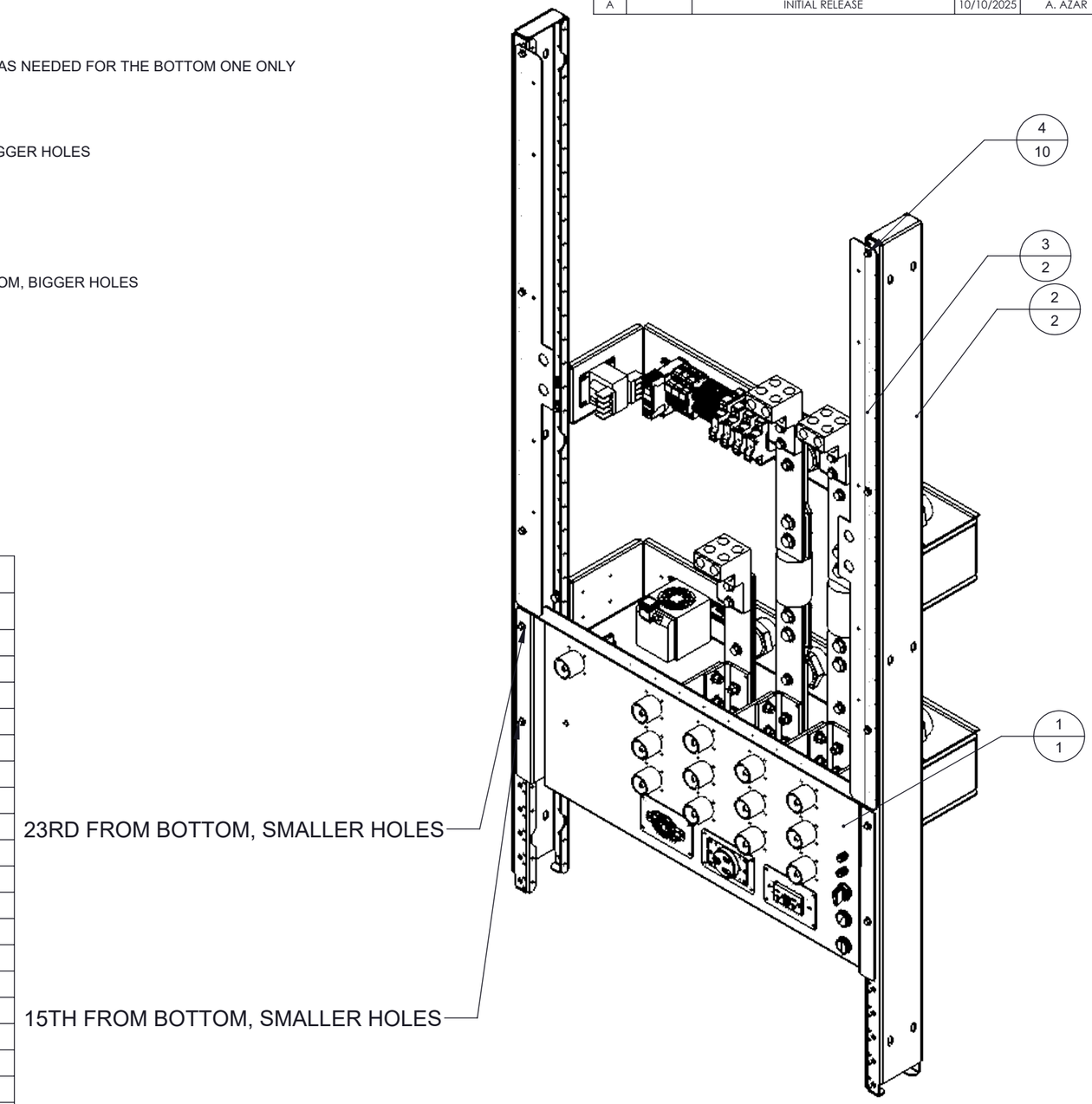

BILL OF MATERIAL

ITEM NO.	PART NUMBER	DESCRIPTION	QTY.
1	100-80611	ASSEMBLY, CAMPLATE, 1200A, KIRK	1
2	250-20120	FRAME, VERTICAL, WALL MOUNT, 70.0"H X 5.0"	2
3	250-80710	FRAME, DEADFRONT MOUNT, 41" LENGTH	2
4	STF-0420X0375-ZN	SCREW, THREAD FORMING - 1/4-20 UNC X 0.375 - 5 ZN	10
5	600T-4	4C 600KCMIL - 2AWG SBS STACK, 2X 3/8" MOUNT MECH LUG	4
6	240-80709	CU #2 OF 2, 625A, 8C - 600 MCM	3
7	240-70683	1250A, CONNECTOR, CAMPLATE TO PH BUS	4
8	559689	2-1/2" X 3/8"-16 THREAD, INSULATED STANDOFF	7
9	250-80709	BRACKET, STANDOFF, 723630	2
10	240-80710	BUS, LUG & FUSE MOUNT, 1600A, 3.5" X 14"	3
11	890-0616A-1.25L	ASSEM, 3/8-16 UNC ZN X 1.25" BH - WF, WP	8
12	890-0616E-1.25L	ASSEM, 3/8-16 UNC ZN X 1.25" BC - WF, WP, NH	12
13	890-0616E-1.5L	ASSEM, 3/8-16 UNC ZN X 1.25" BC - WF, WP, NH	8
14	890-0616D-1.0L	ASSEM, 3/8-16 UNC ZN X 1.0" BH - WF, WF, WP, NH	8
15	240-80713	CU, 625A, 8C - 600 MCM	2
16	MERSEN_A4BY1200	FUSE, 1200A - MERSEN	3
17	240-80711	BUS, LUG & FUSE MOUNT	3
18	240-80712	CU #2 OF 2, 625A, 8C - 600 MCM	3
19	LEVITON_L5_30R_2610	GFNT2-W	1
20	SP50ACP	HAMMOND 50VA CONTROL TRANSFORMER	1
21	HEATER - STEGO_02821.9-06		1
22	DINRAIL_35	DIN RAIL	1
23	100-80612	DIN RAIL ASSEMBLY, AG, FUSE HOLDER, TERMINALS	1
24	890-0813D-2.0L	ASSEM, 1/2-11 UNC ZN X 2.25" BH,WF,WP, WF, NH	12
25	890-0616D-1.75L	ASSEM, 3/8-16 UNC ZN X 1.75" BOLT - WF, WF, WP, NH	8
26	SPH-#032X0500-ZN	SCREW, PANHEAD - #10-32 UNF X 0.5 - 5 ZN	6

MATERIAL 148.59 lbs

FINISH

PROPRIETARY AND CONFIDENTIAL

THE INFORMATION CONTAINED IN THIS DRAWING IS THE SOLE PROPERTY OF FOXFAB POWER SOLUTIONS ANY REPRODUCTION IN PART OR AS A WHOLE WITHOUT THE WRITTEN PERMISSION OF FOXFAB POWER SOLUTIONS IS PROHIBITED.

DRAWN BY	SAVED ON	
AA	10/10/2025	
BD	TOP DIE	BOTTOM DIE
-	-	-

UNLESS OTHERWISE SPECIFIED:
DIMENSIONS ARE IN INCHES
TOLERANCES:
X ± .3
X.X ± .15
X.XX ± .06
X.XXX ± .03
ANGULAR ±1
INTERPRET DIM AND TOL. PER:
ASME Y14.5

Foxfab Power Solutions
2579-188 ST.
SURREY, BC V3Z 2A1
(604) 460 - 9310
WWW.FOXFAB.COM

TITLE:
ASSEMBLY, INTERNAL, FFCC-C1, 1200A, FRAME MOUNT, 4C 600MCM

THIRD ANGLE: | SIZE **B** | SCALE 1:16 | REV A

ITEM NO. | DWG. NO. 100-80610 | SHEET 1 OF 3

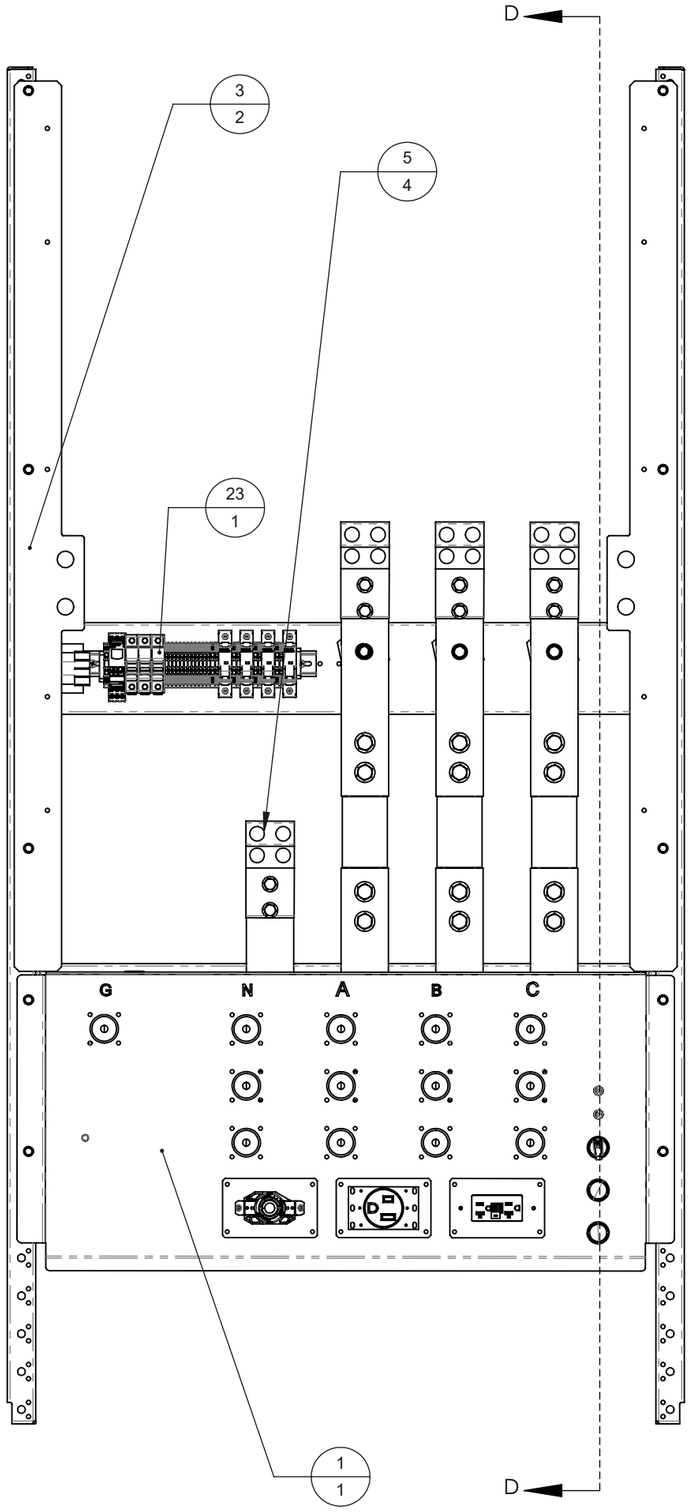

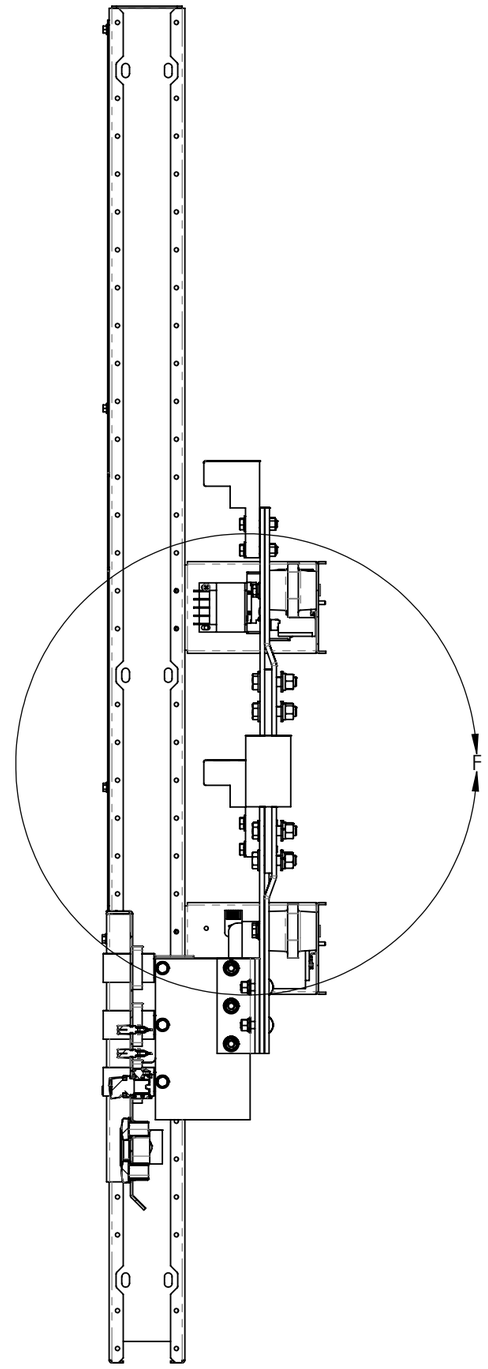

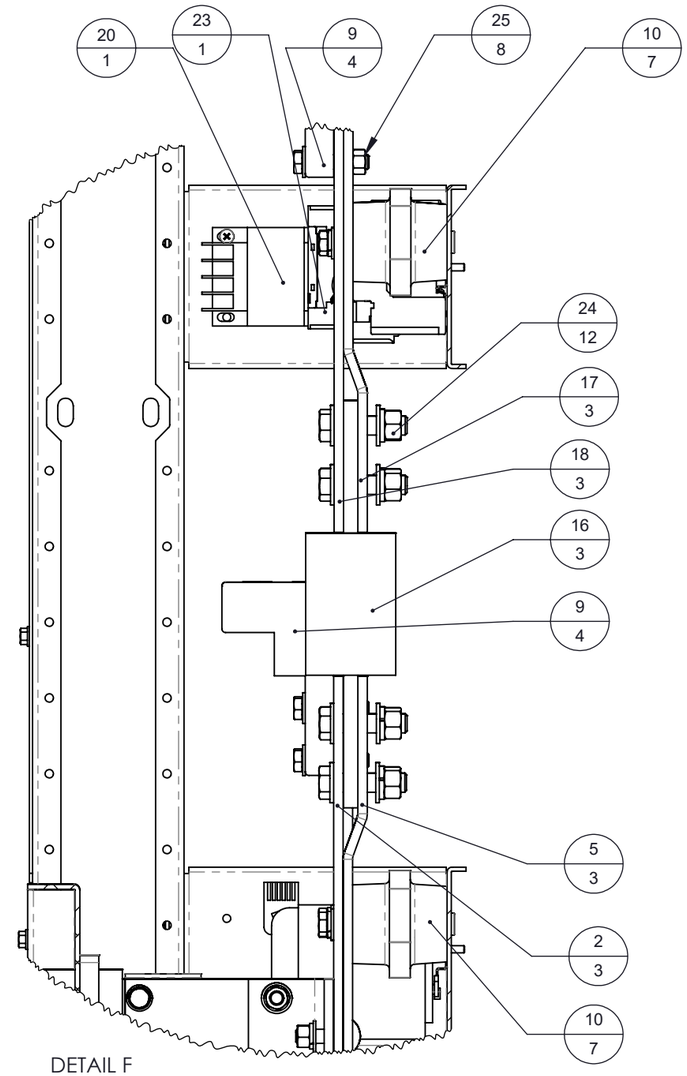

DETAIL F
SCALE 1 : 4

MATERIAL	148.59 lbs	DRAWN BY: AA	SAVED ON: 10/10/2025
FINISH		BD: -	TOP DIE: - / BOTTOM DIE: -

PROPRIETARY AND CONFIDENTIAL

THE INFORMATION CONTAINED IN THIS DRAWING IS THE SOLE PROPERTY OF FOXFAB POWER SOLUTIONS ANY REPRODUCTION IN PART OR AS A WHOLE WITHOUT THE WRITTEN PERMISSION OF FOXFAB POWER SOLUTIONS IS PROHIBITED.

UNLESS OTHERWISE SPECIFIED:
DIMENSIONS ARE IN INCHES
TOLERANCES:
X ± .3
X.X ± .15
X.XX ± .06
X.XXX ± .03
ANGULAR ±1
INTERPRET DIM AND TOL. PER:
ASME Y14.5

Foxfab Power Solutions
2579-188 ST.
SURREY, BC V3Z 2A1
(604) 460 - 9310
WWW.FOXFAB.COM

TITLE:
ASSEMBLY, INTERNAL, FFCC-C1, 1200A, FRAME MOUNT, 4C 600MCM

THIRD ANGLE: | SIZE **B** | SCALE 1:16 | REV A

ITEM NO. | DWG. NO. 100-80610 | SHEET 2 OF 3

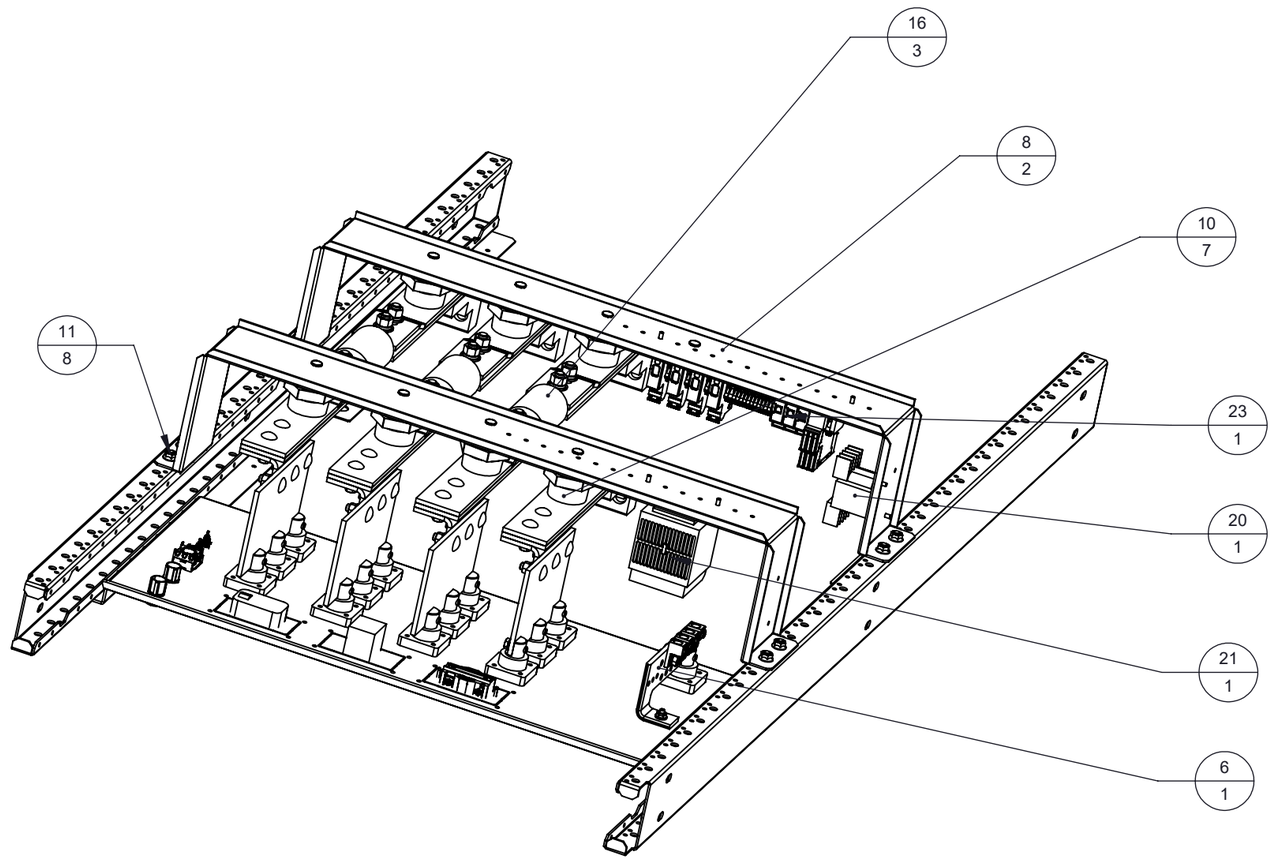

MATERIAL	148.59 lbs	DRAWN BY: AA	SAVED ON: 10/10/2025
FINISH		BD: -	TOP DIE: - / BOTTOM DIE: -

PROPRIETARY AND CONFIDENTIAL

THE INFORMATION CONTAINED IN THIS DRAWING IS THE SOLE PROPERTY OF FOXFAB POWER SOLUTIONS ANY REPRODUCTION IN PART OR AS A WHOLE WITHOUT THE WRITTEN PERMISSION OF FOXFAB POWER SOLUTIONS IS PROHIBITED.

UNLESS OTHERWISE SPECIFIED:
DIMENSIONS ARE IN INCHES
TOLERANCES:
X ± .3
X.X ± .15
X.XX ± .06
X.XXX ± .03
ANGULAR ± 1
INTERPRET DIM AND TOL. PER:
ASME Y14.5

Foxfab Power Solutions
2579-188 ST.
SURREY, BC V3Z 2A1
(604) 460 - 9310
WWW.FOXFAB.COM

TITLE:
ASSEMBLY, INTERNAL, FFCC-C1, 1200A, FRAME MOUNT, 4C 600MCM

THIRD ANGLE: | SIZE **B** | SCALE 1:16 | REV A

ITEM NO. | DWG. NO. 100-80610 | SHEET 3 OF 3

REVISION				
REV.	ZONE	DESCRIPTION	DATE	DRAWNBY
A		INITIAL RELEASE	10/10/2025	A. AZAR

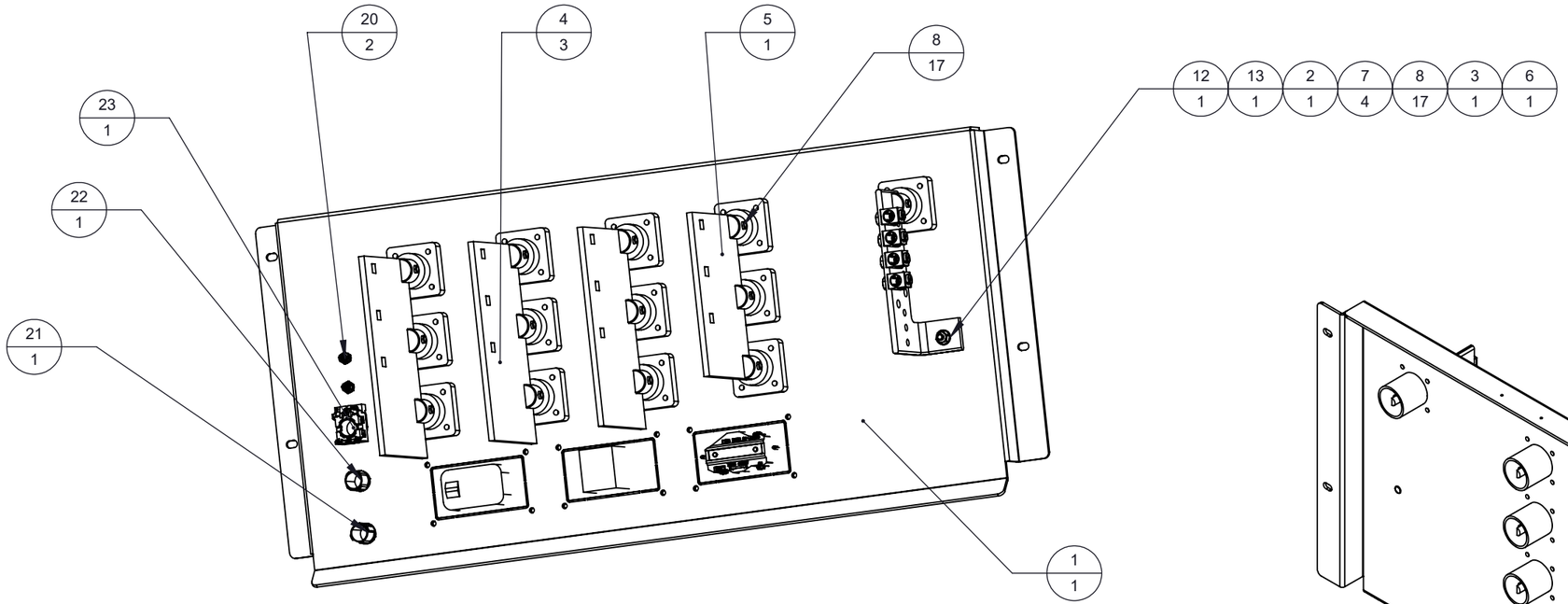

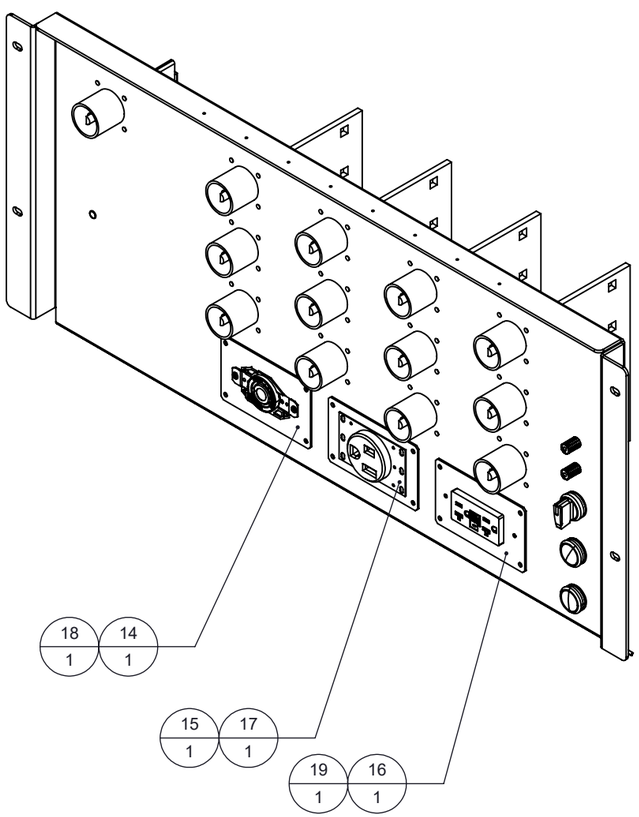

BILL OF MATERIAL

ITEM NO.	PART NUMBER	DESCRIPTION	QTY.
1	200-80203	CAMPLATE, GEN/LB, 1200A, 723630, KIRK SLIDER	1
2	PEM FH-0420-14 ZI		1
3	HBLMRBGN (G) OR HBLFRBGN (L)	INSULATED RECEPTACLE SINGLE POLE SINGLE HOLE BUSBAR, GREEN MALE	1
4	240-80708	CAMPLATE, 1250A, PH BUS COMMON	3
5	240-70685	NEUTRAL BUS, 1250A	1
6	240-70476	BUS BAR, CAMPLATE, UPTO 1200A, GROUND COMMON	1
7	S2-0-34-44	1C 2/0-14AWG, 5/16" MOUNT MECH LUG	4
8	BH-0518X1000-ZN	BOLT, HEX - 5/16-18 UNC X 1 - 5 ZN	17
9	WF-0313-ZN	WASHER, FLAT - 5/16 - ZN	21
10	WP-0313-ZN	LOCK WASHER, 5/16 ID, ZN	17
11	NH-0518-ZN	NUT, HEX - 5/16-18 UNC - 5 ZN	4
12	WF-0250-ZN	WASHER, FLAT - 1/4 - ZN	1
13	NS-0420-ZN	NUT, SERRATED - 1/4-20 UNC - 5 ZN	1
14	250-30834_837	PLATE, RECEPTACLE ADAPTER, 30A STRAIGHT PLATE	1
15	250-30836	PLATE, RECEPTACLE ADAPTER, 30A STRAIGHT PLATE	1
16	250-30834	PLATE, RECEPTACLE ADAPTER, 30A STRAIGHT PLATE	1
17	P&S 3830	POWER RECEPTACLE, 30A, 125V, 2P3W, P&S3830	1
18	2610	RECEPTACLE, LEVITON 30A L5-30R PN: 2610	1
19	2097TRWRW (LEGRAND)	RECEPTACLE 5-20R_20A GFCI_LEVITON GFNT2-W	1
20	375-591-10	BANANA JACK, 11X18MM, BLACK	2
21	3SU1051-6AA40-0AA0	GREEN PILOT LIGHT	1
22	3SU1051-6AA20-0AA0	RED PILOT LIGHT	1
23	3SU1052-2BL60-0AA0	SIEMENS_3 POSITION SELECTOR SWITCH_3SU1052_2BL60_0AA0	1

MATERIAL 26.32 lbs

FINISH

PROPRIETARY AND CONFIDENTIAL

THE INFORMATION CONTAINED IN THIS DRAWING IS THE SOLE PROPERTY OF FOXFAB POWER SOLUTIONS ANY REPRODUCTION IN PART OR AS A WHOLE WITHOUT THE WRITTEN PERMISSION OF FOXFAB POWER SOLUTIONS IS PROHIBITED.

DRAWN BY: AA
SAVED ON: 10/10/2025
BD: -
TOP DIE: -
BOTTOM DIE: -

UNLESS OTHERWISE SPECIFIED:
DIMENSIONS ARE IN INCHES
TOLERANCES:
X ± .3
X.X ± .15
X.XX ± .06
X.XXX ± .03
ANGULAR ± 1
INTERPRET DIM AND TOL. PER:
ASME Y14.5

Foxfab Power Solutions
2579-188 ST.
SURREY, BC V3Z 2A1
(604) 460 - 9310
WWW.FOXFAB.COM

TITLE:
ASSEMBLY, CAMPLATE, 1200A

THIRD ANGLE:
SIZE B
SCALE 1:8
REV A
ITEM NO.
DWG. NO. 100-80611
SHEET 1 OF 1

REVISION				
REV.	ZONE	DESCRIPTION	DATE	DRAWNBY
A		INITIAL RELEASE	10/10/2025	A. AZAR

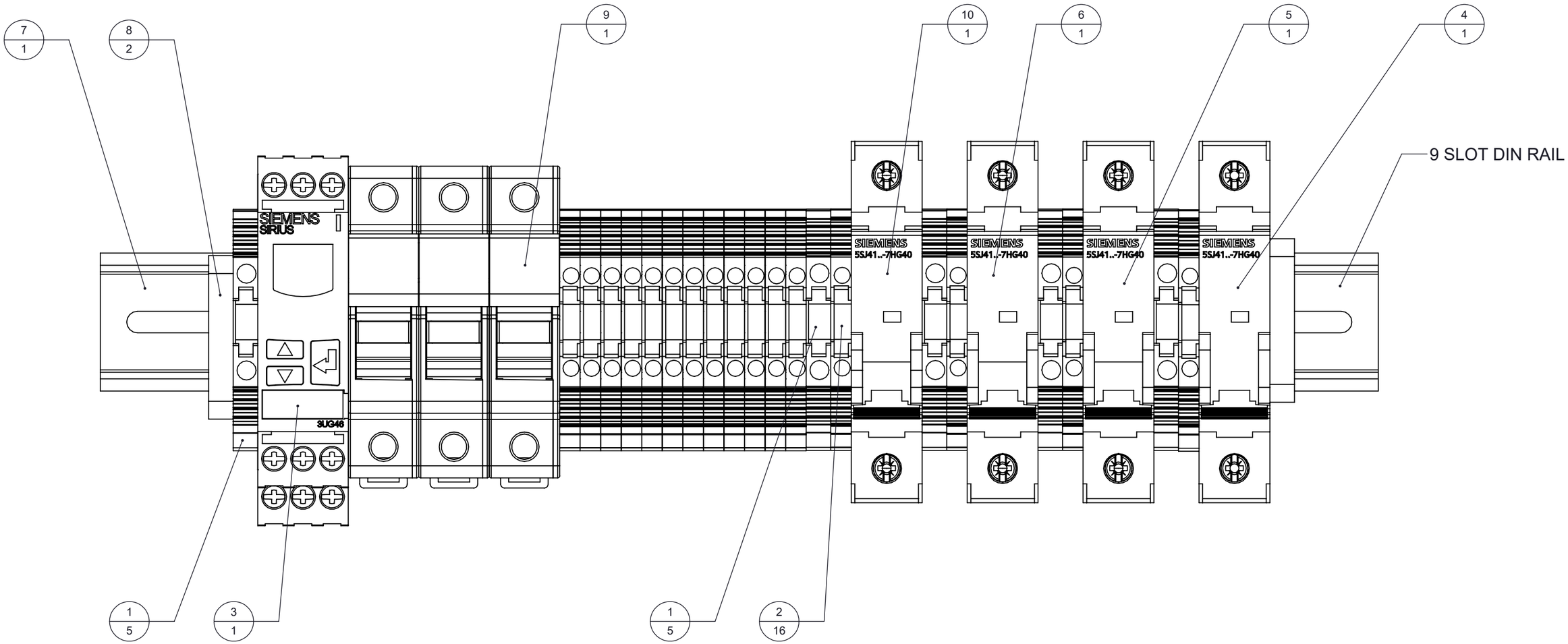

BILL OF MATERIAL

ITEM NO.	PART NUMBER	DESCRIPTION	QTY.
1	1010100000	WPE 4; WEIDMULLER TERMINAL BLOCK, GROUND 26-10 AWG	5
2	1020000000		16
3	3UG4614-1BR20	PHASE MONITORING RELAY, 90-400 V, 5A, DIN RAIL, SCREW TERMINAL, 3UG SERIES	1
4	5SJ4103-7HG40_G_I202_XX_34623V		1
5	5SJ4120-7HG40		1
6	5SJ4130-7HG40		1
7	DINRAIL_35	DIN RAIL	1
8	END CLAMP__	END CLAMP (Z3.523.9353.0)	2
9	MERSEN_USCC3	FUSE HOLDERS 600V 30A CLASS CC 3-POLE NO INDICATOR	1
10	MINI BREAKER 50A 1P_SIEMENS 5SJ4150-7HG40	MINI BREAKER 50A 1P_SIEMENS 5SJ4150-7HG40	1

MATERIAL 3.95 lbs

FINISH
BARE

PROPRIETARY AND CONFIDENTIAL

THE INFORMATION CONTAINED IN THIS DRAWING IS THE SOLE PROPERTY OF FOXFAB POWER SOLUTIONS ANY REPRODUCTION IN PART OR AS A WHOLE WITHOUT THE WRITTEN PERMISSION OF FOXFAB POWER SOLUTIONS IS PROHIBITED.

DRAWN BY: AA
SAVED ON: 10/10/2025
BD: -
TOP DIE: -
BOTTOM DIE: -

UNLESS OTHERWISE SPECIFIED:
DIMENSIONS ARE IN INCHES
TOLERANCES:
X ± .25
X.X ± .1
X.XX ± .05
X.XXX ± .025
ANGULAR ± 1
INTERPRET DIM AND TOL. PER:
ASME Y14.5

Foxfab Power Solutions
2579-188 ST.
SURREY, BC V3Z 2A1
(604) 460 - 9310
WWW.FOXFAB.COM

TITLE:
DIN RAIL ASSEMBLY, AG, FUSE HOLDER, TERMINALS

THIRD ANGLE:
SIZE **B**
SCALE 1:4
REV A
ITEM NO.
DWG. NO. 100-80612
SHEET 1 OF 1